airpower europe gmbh

ape

competence in actuators, valves and more

Soft seated butterfly valve

flu-con

SERIE 24
LUG

www.airpower-gmbh.com

Company profile

Airpower in Dattenberg near Linz am Rhein, located between Bonn and Koblenz, is your independent partner for pneumatic and electric rotary actuators as well as industrial valves designed for the process industry and plant construction.

The company headquarters were part of an investment, made in 2019, with a new 5000 sqm building complex comprising spacious administration, storage, and production areas.

As an independent company, we offer comprehensive and professional technical advice and support in matters of engineering and customer service. Our technical support is geared towards specific project-related requirements targeting optimal cost-benefit ratio. We attach great importance to personal contact. We are committed to support you! An experienced team ensures your absolute satisfaction. Well-engineered product technology, designed and produced according to international standards and norms, guarantees absolute safety.

We have international approvals according to DIN EN ISO 9001-2015, ATEX, SIL3, EAC etc. Our employees, either in Sales, Construction, Purchase or Assembly make sure that orders are processed smoothly and quickly. We deliver over 10.000 pneumatic actuators from 4 to 13.000 Nm from stock. Our program includes manually operated and fully automated industrial valves from nominal width DN10 to DN1400.
Upon request from customers we also deliver special designs with the help of our construction department. Thus, along with the standard 90° swivel angle, we also supply actuators with different angles such as 120°, 135°, 180° and 3-position actuators (metering unit) as well as Scotch-Yoke actuators.

Our global sales market includes complete European area, Scandinavia, the Middle East, Africa. Asia and South America. Professional closeness to our customers is highly important for us. Benefit from our expertise!

You can send us an e-mail or call us at:

E-Mail: sales@airpower-gmbh.com
Phone: +49 2644 40697 0
Fax: +49 2644 40697 99

Technical developments and changes are reserved.
Version 2025 airpower Europe GmbH

Technical specifications

Lug type		Standard version	By request
Nominal diameter		DN50 to DN1200, 2“ to 48“	Other nominal sizes on request
Mounting between flanges	DN40 (1 1/2“) to DN150 (6“)	EN1092 -1 PN10, PN16	EN1092-1 PN6, ASME B16.1 CLASS125, CLASS150
Mounting between flanges	DN200 (8“) and above	EN1092 - 1 PN10 Other standards by request	PN6, PN16, ANSI150
Standard pressure	DN40 (1 1/2“) to DN300 (8“)	16 bar (232 psi)	
Standard pressure	DN350 (10“) and above	10 bar (145 psi)	
Maximum pressure	DN040 (1 1/2“) to DN500 (24“)	20 bar (290 psi)	
Maximum pressure	DN600 (28“) and above	16 bar (232 psi)	
Body		Ductile casting GGG40 (EN-JS-1030) (EN-GJS-400-15)	ductile cast iron GGG40.3 (EN-JS 1025) (EN)(EN-GJS-400-18-LT), Stainless steel 1.4408/AISI 316 A743 (CF8M), cast iron EN-GJL250 (GG25), Cast steel 1.0619/GP240GH (G-SC25)/A216 WCB
Disc		Stainless steel 1.4408	Stainless steel 1.4408(polished), Stainless steel 1.4404, Alu-bronze 2.0975, Hastelloy 2.4610, cast steel 1.0619, Stainless steel 1.4408/ ECTFE coated, Duplex 1.4462
The temperature of the medium is based on the possible sealing (elastomers)		EPDMH -30°C to +130°C NBR -20°C to +80°C	FKM -10°C to +150°C FKM-PX -10°C to +180°C PTFE/FKM -10°C to +180°C Silicone -35°C to +150°C EPDMH/FDA -20°C to +130°C HNBR -20°C to +110°C PTFE/FKM -10°C to +180°C PTFE/EPDM -10°C to +120°C CSM/Hypalon -20°C to +90°C PU -15°C to +80°C
Butterfly valves in double- and triple-eccentric version are also in our product range!			

Part description

Pos.-No.	Description
1	Body
2	Disc
3	Stem/Bolt
4	Seat (NBR, EPDM, Silicone, FKM, PTFE)
5	Bearing bush
6	V-Ring
7	Safety ring
8	Plug
9	Seal ring
10	Safety screws

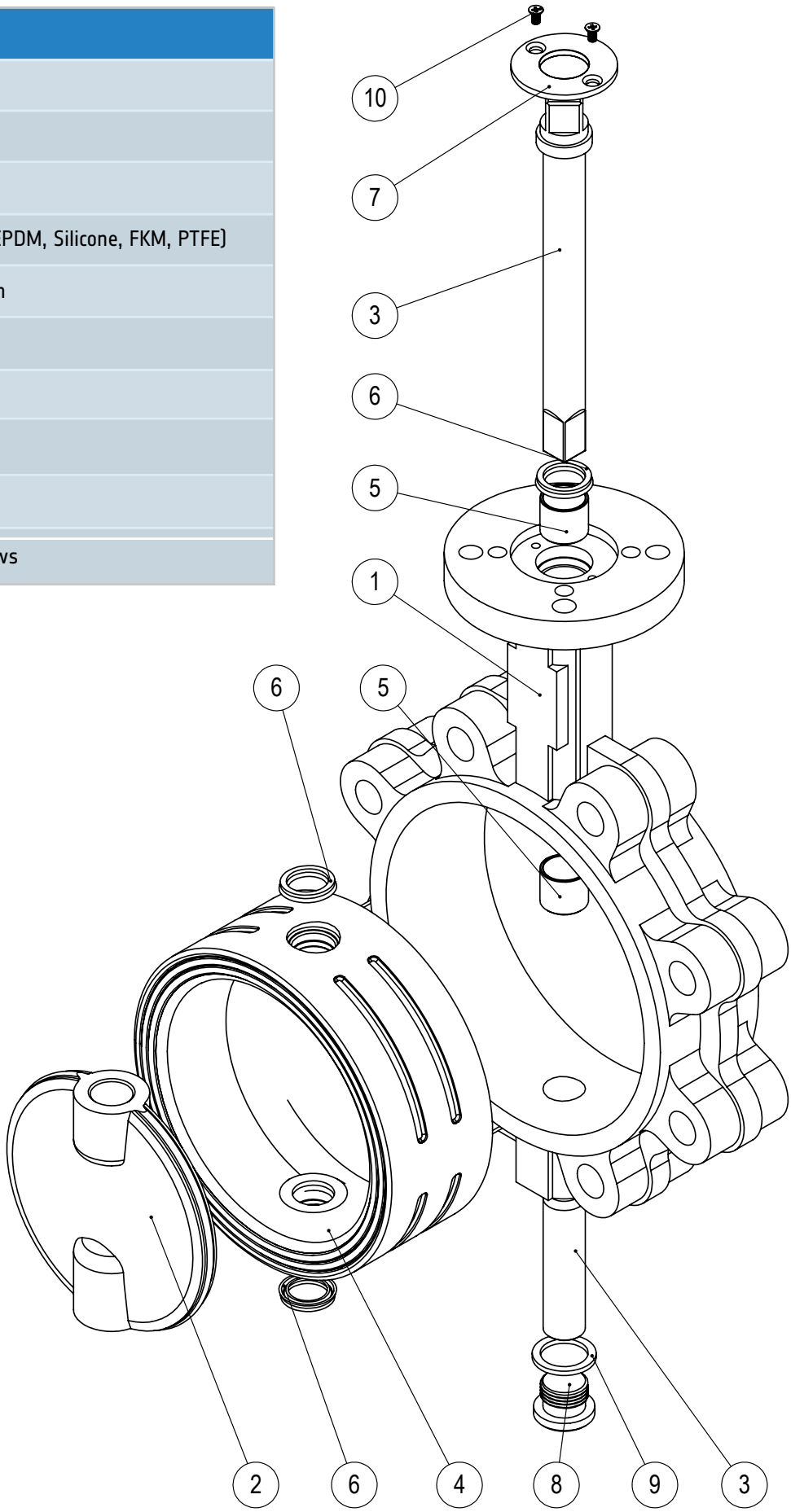

Technical developments and changes are reserved.
Version 2025 airpower Europe GmbH

Advantages/benefits of Series 24 DN50 (2") - DN1200 (48")

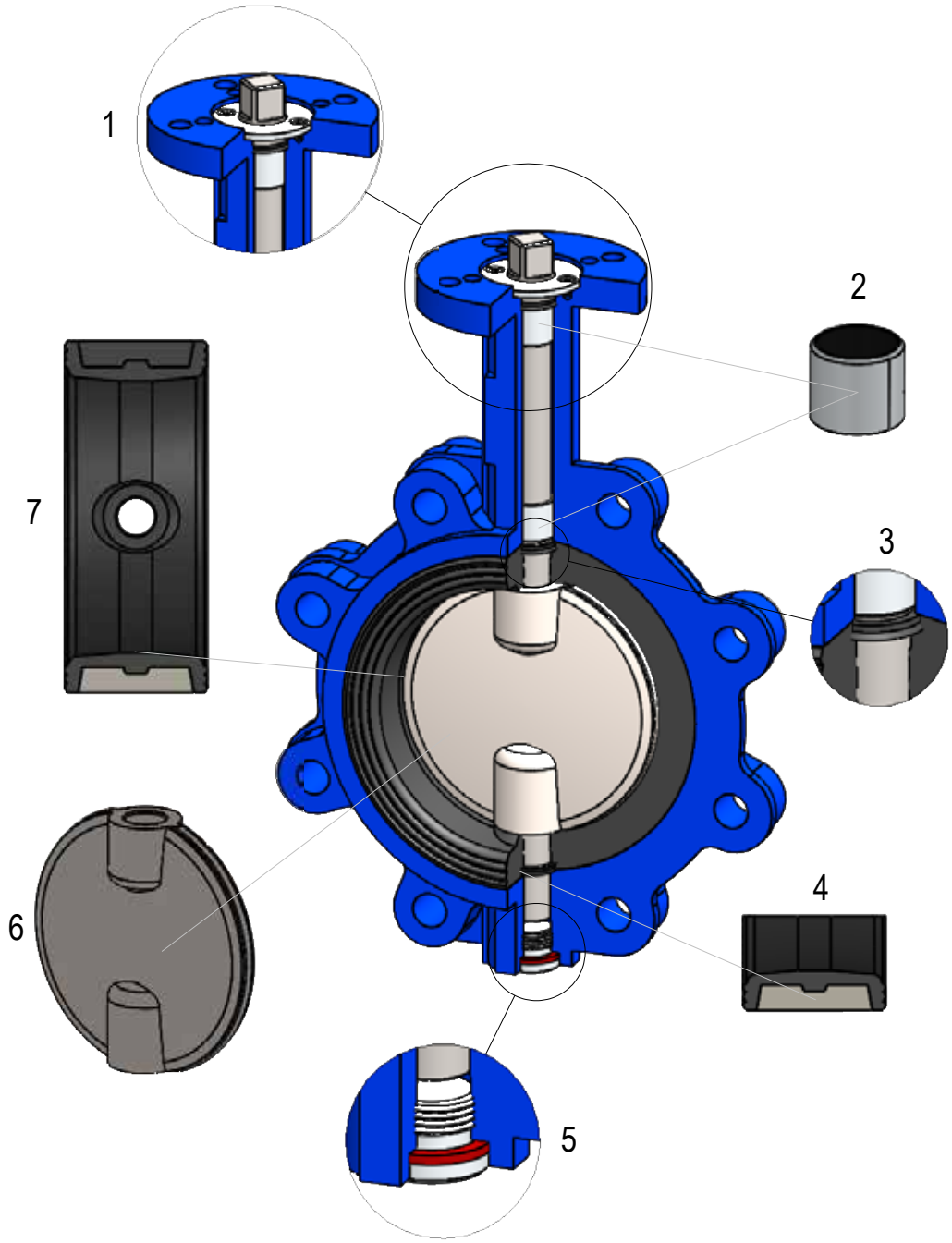

1	The stem safety ring is made of stainless steel and designed with a special geometry
2	The PTFE coated steel-bearing bushing ensures a high switching frequency
3	The V-type ring as an additional seal prevents leakage on the shaft
4	By vulcanizing the elastomer onto a support ring, the stability of the seat is ensured. Thus replacing the seat becomes very easy
5	The bolt is secured by a locking screw. An additional sealing ring ensures that the inside of the bolt is protected against dirt and liquids
6	The disc with the two-part shaft construction improves the c_V value of the butterfly valve and avoids turbulence. The shape of the disc edge ensures a low operating torque and extends the life of the butterfly valve
7	The special seat geometry guarantees a longer lifespan of the sealing. Automation with competitive prices. Ideal for vacuum applications. Easy mounting between two flanges

Torque values Series 24

Torque (Nm)

Series 24 DN	NPS	Torque value at closed butterfly valve 16 bar (Nm)	Torque value at closed butterfly valve 10 bar (Nm)	Torque value at closed butterfly valve 6 bar (Nm)	Torque value at closed butterfly valve 3 bar (Nm)
DN40	1 1/2“	12,10	11,40	10,20	9,80
DN50	2“	14,10	13,20	12,00	11,40
DN65	2 1/2“	14,80	13,60	12,50	12,10
DN80	3“	22,40	21,00	19,80	18,80
DN100	4“	41,53	37,80	35,00	32,20
DN125	5“	66,33	59,90	54,80	49,70
DN150	6“	103,80	93,20	84,20	74,60
DN200	8“	194,80	171,70	152,50	135,60
DN250	10“	332,00	288,10	249,70	214,60
DN300	12“	502,60	429,30	372,80	316,30
DN350	14“		622,20	542,30	470,40
DN400	16“		859,50	745,60	622,20
DN450	18“		1152,30	982,80	813,40
DN500	20“		1480,30	1254,00	1028,90
DN600	24“		2133,40	1830,10	1525,10
DN700	28“		3599,00	3059,00	2519,00
DN800	32“		4740,00	3981,00	3270,00
DN900	36“		7200,00	5976,00	5110,00
DN1000	40“		10500,00	8940,00	7350,00
DN1200	48“		15060,00	12800,00	10540,00

Note:
The table values refer to water, seawater, and hydrocarbon lubricants. Temperatures of 0°C to 80°C. Butterfly valves are to operate at least once a month. For other liquids and lubricating gases applications multiply the value by 1.25. For lubricant-free and dry media the value shall be multiplied by 1.3.

The operating torque value in the table is the sum of all friction and resistance values for the opening and closing of the disc at the specified pressure difference.

The effect of the dynamic torque is not considered in the table.

When sizing the actuator, the torque value in the table must be multiplied by 1.25.

The butterfly valve can be equipped with four different discs, which can be adapted to the differential pressure. The reference value is the pressure on the butterfly valve and the differential pressure. For example, with a butterfly valve size DN125 PN 16. If the differential pressure is 9 bar, a 75% disc should be used. The disc can be operated at 12 bar (75% of 16 bar).

Maximum permissible spindle torques in Nm for Series 24

Dimension		DN40 1 1/2“	DN50 2“	DN65 2 1/2“	DN80 3“	DN100 4“	DN125 5“	DN150 6“	DN200 8“	DN250 10“
torques-(Nm)	material SS420	73	73	73	112	178	178	446	446	1277

Dimension		DN300 12“	DN350 14“	DN400 16“	DN500 20“	DN600 24“	DN700 28“	DN800 32“	DN900 36“	DN1000 40“	DN1200 48“
torques (Nm)	material SS420	1277	2400	2400	5216	9600	9600	24780	49926	49926	58098

Other materials available on request!

Technical developments and changes are reserved.
Version 2025 airpower Europe GmbH

Flow values Series 24

Kv values (m³/h at 1 bar)

Series 24		Opening angle								
DN	NPS	10°	20°	30°	40°	50°	60°	70°	80°	90°
DN40	1 1/2"	0	0	2	5	15	25	43	59	75
DN50	2"	0	0	5	11	21	41	77	101	120
DN65	2 1/2"	0	1	8	22	33	83	111	165	209
DN80	3"	0	6	18	38	53	94	174	279	388
DN100	4"	0	17	38	70	103	170	300	614	750
DN125	5"	0	24	61	115	170	288	494	978	1234
DN150	6"	0	34	88	174	263	434	751	1473	2044
DN200	8"	1	49	153	327	503	826	1406	2668	3924
DN250	10"	8	71	235	518	840	1423	2295	4211	6929
DN300	12"	18	91	324	775	1330	2133	3539	6373	11496
DN350	14"	36	100	486	1188	1788	2634	4147	7153	12558
DN400	16"	54	159	715	1674	2518	3467	5798	10858	15311
DN450	18"	88	271	967	1925	3108	4532	7249	13911	19857
DN500	20"	135	406	1266	2534	4009	6637	9403	16462	25403
DN600	24"	189	585	1874	3657	5283	8344	13224	24315	33315
DN700	28"	241	1211	2775	4829	7853	11096	17797	33332	43899
DN800	32"	343	2045	3848	6209	10955	15550	23452	43683	55441
DN900	36"	531	2614	5253	8189	14550	20702	32219	57256	69229
DN1000	40"	754	3338	6851	10917	18988	27563	42416	70630	82991
DN1200	48"	1071	4940	10746	18338	27935	43873	70523	110368	114824

Kv=m3 water per hour at 20°C and 1 bar of pressure loss.
c_V= 1.167 Kv
c_V= US gallons of water per minute at 60°F and 1 psi of pressure loss.

Weights Series 24

Dimension		Series 24 (Kg)
1 1/2"	DN40	2,90
2"	DN50	2,60
2 1/2"	DN65	3,50
3"	DN80	4,50
4"	DN100	6,00
5"	DN125	7,60
6"	DN150	9,80
8"	DN200	15,10
10"	DN250	27,00
12"	DN300	37,00
14"	DN350	62,50
16"	DN400	94,50
18"	DN450	122,50
20"	DN500	163,50
24"	DN600	223,00
28"	DN700	340,00
32"	DN800	495,00
36"	DN900	650,00
40"	DN1000	750,00
48"	DN1200	1230,00

Lug type body dimensions Series 24 DN50 (2") to DN1200 (48") with bare shaft

DN50 - DN300

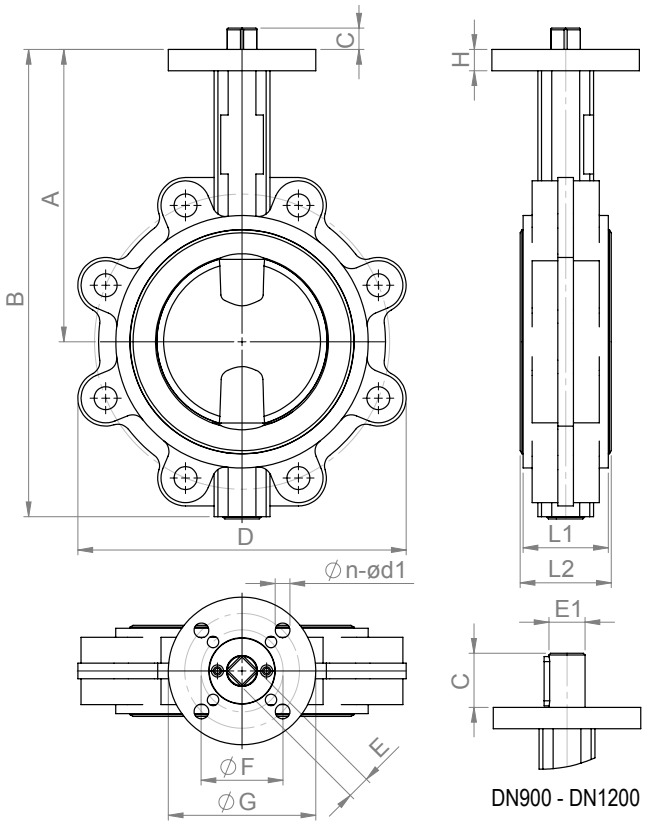

DN900 - DN1200

DN350 - DN1200

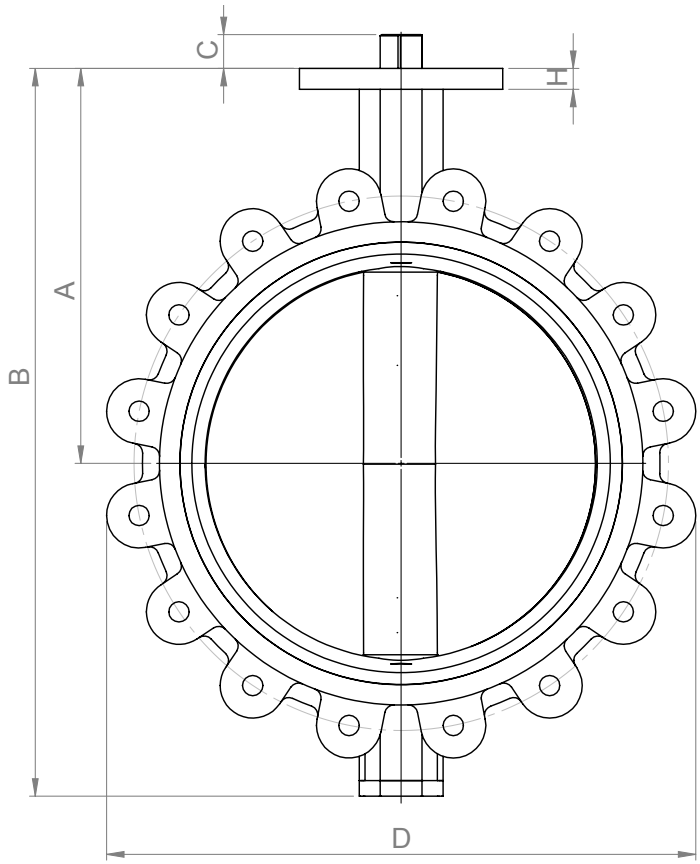

Dimension	A	B	C	E/E1	D	F	G	n-Ød1	H	L1	L2
DN50	140	218	13,5	11*11	125	50	65	4-ø7	11	43	46
DN65	152	232	13,5	11*11	136	50	65	4-ø7	11	46	49,5
DN80	159	250	13,5	11*11	182	50	65	4-ø7	12,5	46	49,5
DN100	178	285	13,5	14*14	200	50/70	90	4-ø7/ø9	12,5	52	55,5
DN125	190	320	17,5	14*14	230	70	90	4-ø9	12,5	56	59
DN150	203	345	17,5	17*17	268	70	90	4-ø9	13	56	59
DN200	238	413	24,5	17*17	320	70/102	125	4-ø9/ø11	14	60	64
DN250	268	475	24,5	22*22	390	102/125	152	4-ø11/ø13	15	68	72,5
DN300	306	544	24,5	22*22	412	102/125	152	4-ø11/ø13	16	78	81,5
DN350	340	633	30	27*27	501	125/140	175	4-ø13/ø18	18	78	81,5
DN400	388	710	30	27*27	570	125/140	175	4-ø13/ø18	20	102	105
DN450	415	753	39	36*36	608	140	210	4-ø18	22	114	118
DN500	441	814	49	36*36	668	140/165	210	4-ø18/ø21.5	23	127	130,5
DN600	505	938	49	46*46	765	165	210	4-ø21.5	23	154	158
DN700	631	1160	58	55*55	910	254	300	8-ø18	30	165	169
DN800	666	1261	58	55*55	1025	254	300	8-ø18	35	190	195
DN900	720	1375	130	ø75	1125	254	300	8-ø18	35	203	208
DN1000	800	1518	130	ø100	1255	254	300	8-ø18	35	216	221
DN1200	941	1785	175	ø120	1485	356	415	8-ø32	35	254	260

Technical developments and changes are reserved.
Version 2025 airpower Europe GmbH

Actuating units for butterfly valves

Aluminium hand lever with grid type RHA to DN200

- locking, adjustable in 10 positions

Manual gear box type HGA from DN50 to DN300

- Ratio of between 37:1 to 45:1
- Torque of between 150 Nm to 750 Nm
- Gear of die cast aluminium

Manual gear box Type HGG from DN350 to DN1200

- Ratio of between 42:1 to 720:1
- Torque of between 497 Nm to 23786 Nm
- Housing made of cast iron and spheroidal graphite

Pneumatic Actuators from airpower

- Double acting
- Single acting
- Torque of between 2.4 Nm to 13.000 Nm
- Max. control pressure 8 bar

You can find more information about our drive on our website: www.airpower-gmbh.com

Electric actuator „auma“ or other

- Torques of between 10 Nm to 32000 Nm
- Terminal voltage: 3-ph AC

Volt	220	230	240	380	400	415	440	460	480	500
Hz	50	50	50	50	50	50	60	60	60	50

Lug type body dimensions Series 24 DN50 (2") to DN1200 (48") with manual gearbox

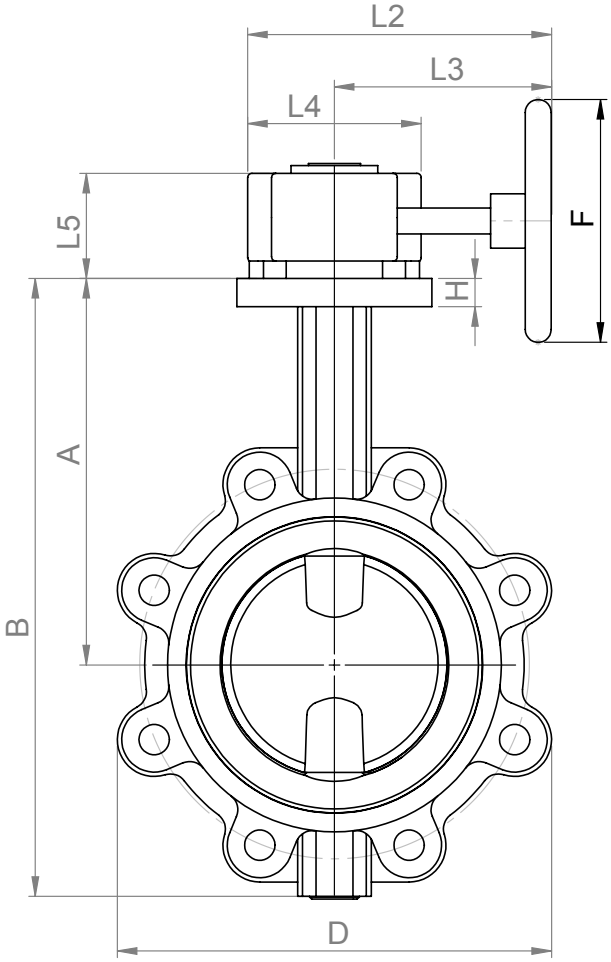

Dimension	A	B	D	F	H	L2	L3	L4	L5
DN50	140	218	125	150	11	139	99	80	48
DN65	152	232	136	150	11	139	99	80	48
DN80	159	250	182	150	12,5	139	99	80	48
DN100	178	285	200	150	12,5	139	99	80	48
DN125	190	320	230	150	12,5	165	115	100	54
DN150	203	345	268	150	13	165	115	100	54
DN200	238	413	320	250	14	293	220	146	71
DN250	268	475	390	250	15	293	220	146	71
DN300	306	544	412	250	16	293	220	146	71
DN350	340	633	501	300	18	291	208	138	72
DN400	388	710	570	300	20	377	277	184	81
DN450	415	753	608	400	22	395	287	210	81
DN500	441	814	668	400	23	483	357	248	91
DN600	505	938	765	500	23	540	382	313	93
DN700	631	1160	910	700	30	593	448	310	122
DN800	666	1261	1025	700	32	593	448	310	122
DN900	720	1375	1125	700	34	658	480	355	160
DN1000	800	1518	1255	700	35	658	480	355	160
DN1200	941	1785	1485	700	35	807	575	415	155

Technical developments and changes are reserved.
Version 2025 airpower Europe GmbH

Lug type body dimensions Series 24 DN50 (2") to DN200 (8") with manual gearbox

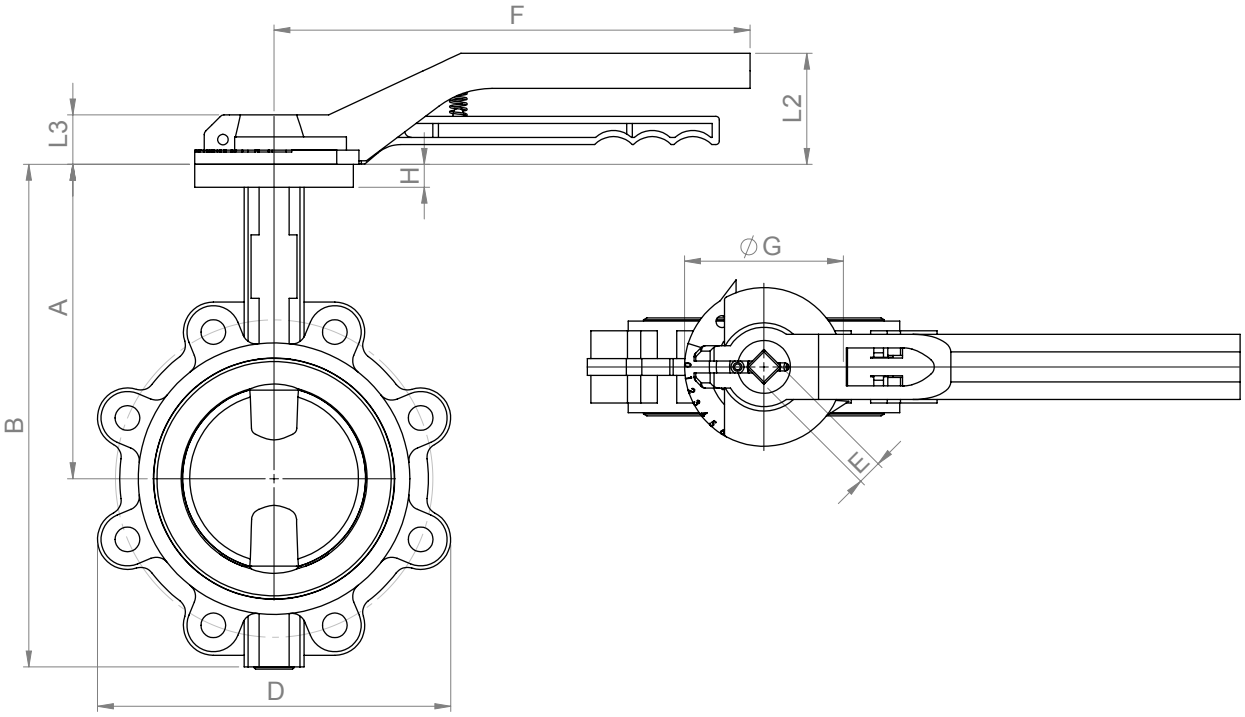

Dimension	A	B	E	D	F	G	H	L2	L3
DN50	140	218	11*11	125	196	65	11	63	20,5
DN65	152	232	11*11	136	196	65	11	63	20,5
DN80	159	250	11*11	182	196	65	12,5	63	20,5
DN100	178	285	14*14	200	270	90	12,5	61	28,5
DN125	190	320	14*14	230	270	90	12,5	61	28,5
DN150	203	345	17*17	268	270	90	13	61	28,5
DN200	238	413	17*17	320	340	125	14	72	35

Pictures of Lug type series 24 with electric actuator

By request

Lug type body dimensions Series 24 with pneumatic actuator double acting type AGD

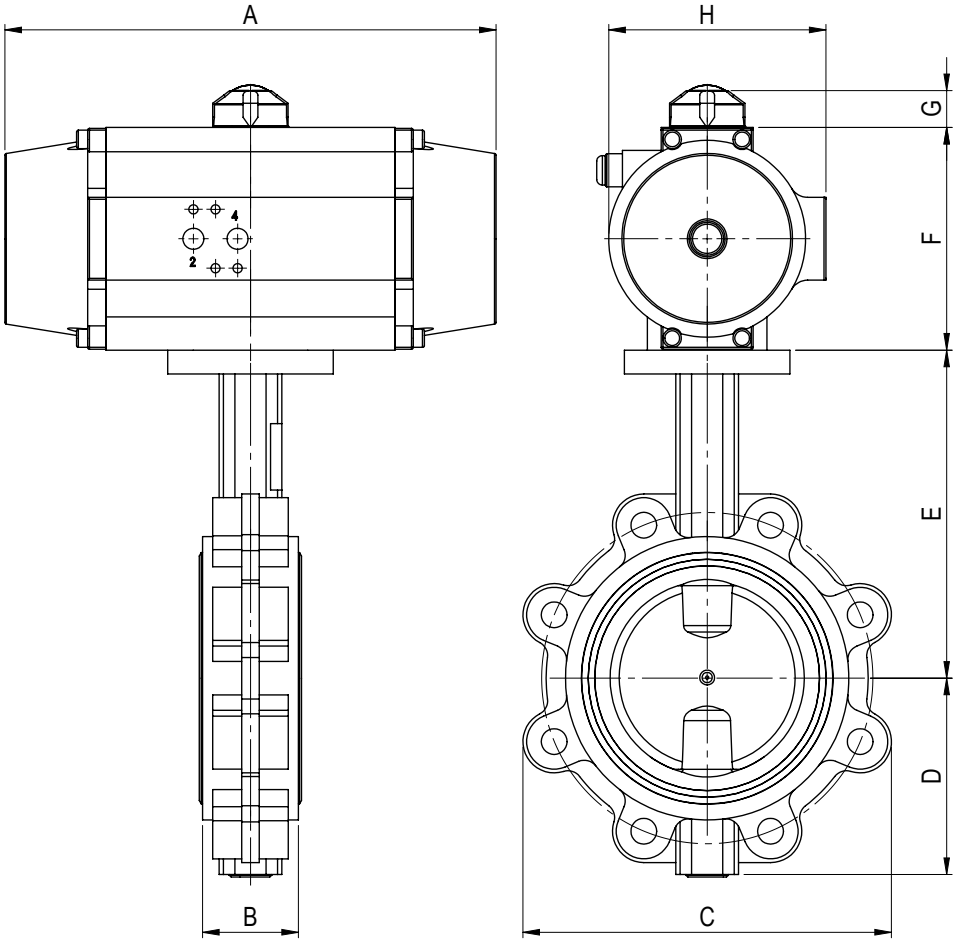

Designed for minimum 6 bar control pressure

Dimension	A	B	C	D	E	F	G	H	AGD
DN50	155	43	105	78	140	74	20	71	004
DN65	155	46	124	80	152	74	20	71	004
DN80	172	46	137	91	159	87	20	86	007
DN100	187	52	170	107	178	99	20	98	010
DN125	218	52	197	130	190	109	20	108	018
DN150	270	52	226	142	203	121	20	118	025
DN200	294	60	279	167	238	140	20	136	045
DN250	308	68	336	207	268	155	20	153	055
DN300	397,5	78	396	232	306	177	30	173	090
DN350	459	78	446	293	340	192	30	190	130
DN400	528	102	500	322	388	230	30	220	220
DN450	528	114	545	350	415	230	30	220	220
DN500	598	127	600	384	441	289	30	260	390
DN600	722	154	718	445	505	326	30	294	600
DN700	757	165	910	505	624	352	30	335	760
DN800	888	190	1025	576	672	408	30	385	1150

DN900 - DN1200 upon request

Technical developments and changes are reserved.
Version 2025 airpower Europe GmbH

Lug type body dimensions Series 24 with pneumatic actuator single acting type AGS

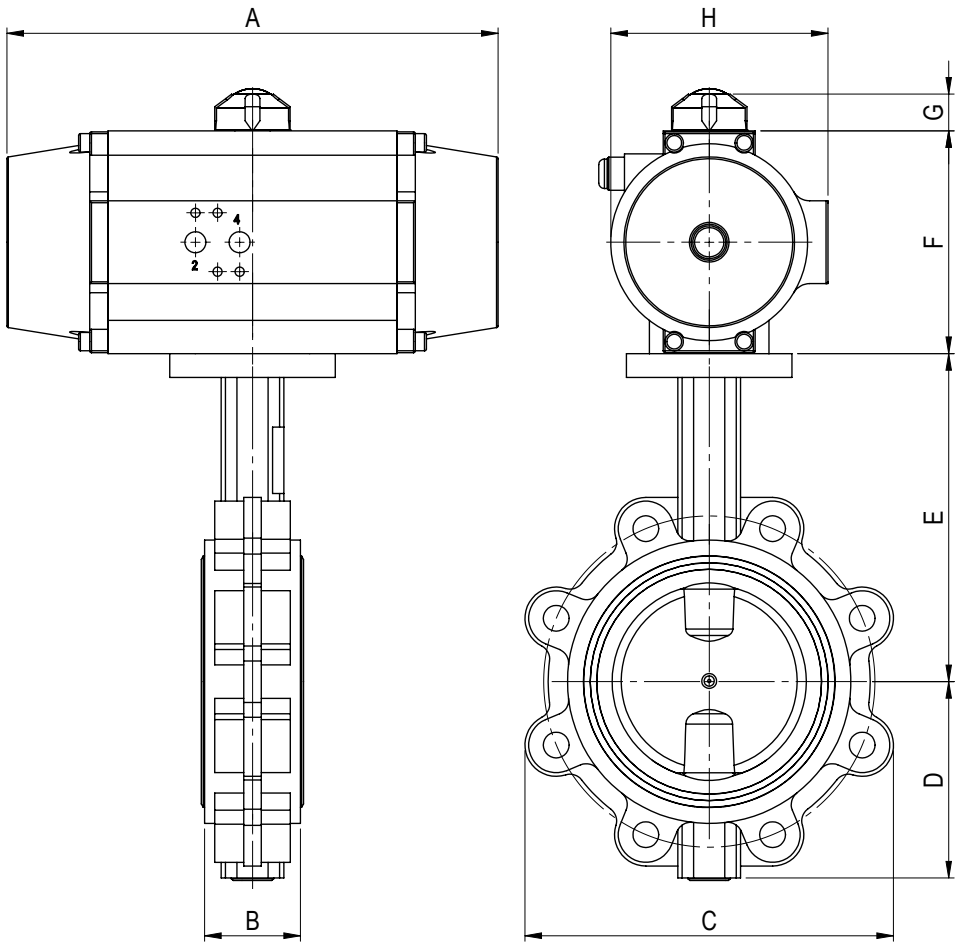

Designed for minimum 6 bar control pressure

Dimension	A	B	C	D	E	F	G	H	AGS
DN50	172	43	105	78	140	87	20	86	007
DN65	187	46	124	80	152	99	20	98	010
DN80	218	46	137	91	159	109	20	108	018
DN100	270	52	170	107	178	121	20	118	025
DN125	294	52	197	130	190	140	20	136	045
DN150	308	52	226	142	203	155	20	153	055
DN200	397,5	60	279	167	238	177	30	173	090
DN250	459	68	336	207	268	192	30	190	130
DN300	527	78	396	232	306	255	30	226	260
DN350	527	78	446	293	340	255	30	226	260
DN400	598	102	500	322	388	289	30	260	390
DN450	722	114	545	350	415	326	30	294	600
DN500	757	127	600	384	441	352	30	335	760
DN600	888	154	718	445	505	408	30	385	1150
DN700	922	165	910	505	624	466	30	520	1680

DN800 - DN1200 upon request

Assembly variants for actuator mounting „parallel to pipe“

Standard: clockwise „CLOSED“
to DIN EN 15714-1

Assembly version: H (double acting + single acting)

Safety position: spring closing, clockwise rotation „closed“

0° basic position

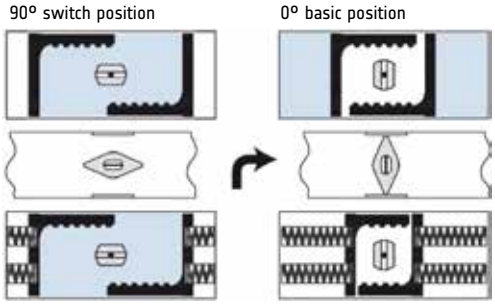

Assembly version: G (double acting + single acting)

Safety position: spring **opening**, clockwise

0° basic position

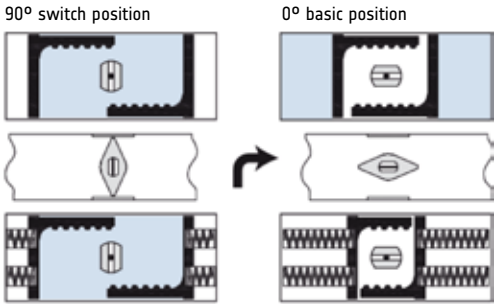

Assembly version: E (double acting + single acting)

Safety position: spring closing, **anti-clockwise**

0° basic position

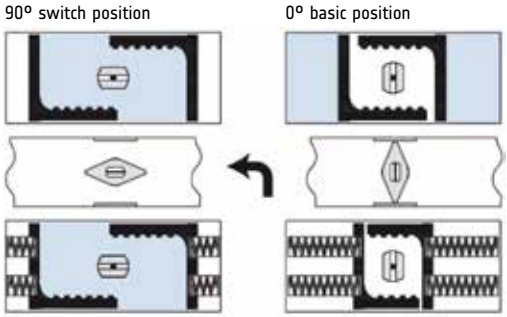

Assembly version: F (double acting + single acting)

Safety position: spring **opening, anti-clockwise**

0° basic position

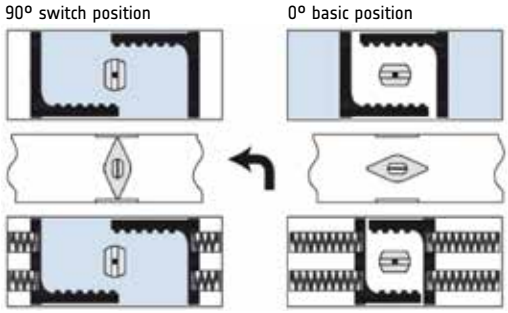

Actuator mounting „across the pipe“ on request.

Technical developments and changes are reserved.
Version 2025 airpower Europe GmbH

Order code

Order example for resilient seated butterfly valve DN050 with bare shaft

1	2	3	4	5	6	7	8	9	10	11	12	13	14
F	L	A	24	050	B	C	H	A	D	C	A	F05 – V11	0

1 Type of acting
F=bare shaft H= lever/gearbox
P=pneum. Actuator, E=electric actuator

2 Valve type
W= Wafer, L= Lug

3 A= Standard valve

4 Valve series
23 = Wafer type, 24= Lug type, 35= Double Eccentric

5 Nominal size of butterfly valve
Nominal size: DN50-DN1200

6 Body material
B=Nodular casting EN-GJS-400-15 / EN-JS-1030 (GGG40)

7 Disc material
C=Stainless steel 1.4480/ ASTM 316 A743 / CF8M / AISI 316

8 Body coating
H= EPDMH, B= NBR Other materials on request!

9 Stem material
A= 1.4021/AISI420

10 Pressure rate
D= PN10/16

11 Delta-p (Differential pressure) Δ
C= 10 bar

12 Construction length
A= DIN EN 558-1 Range 20 (Series 23 and 24) K1

13 Interface/square shaft
F= DIN EN ISO 5211/ V= square shaft

14 Assembly
0= no assembly
Setup on request (presentation of actuating units on page 9)

Service hotline for requests and information:
+49 2644 / 40697 0

Excerpt from the airpower product portfolio

Solenoid valves

Positioner

Limit switch box

pneumatic actuator

Manual gearbox

Pressure booster

Mounting brackets and couplings

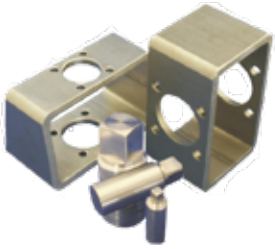

airpower europe gmbh ape
competence in actuators, valves and more

Auf der Hohl 7
D – 53547 Dattenberg

Tel. + 49 2644 / 406970
Fax. + 49 2644 / 4069799

info@airpower-gmbh.com

For Agent

www.airpower-gmbh.com